REV	REVISION RECORD	DWG BY	DATE	APPROVED BY
A	New print	A.W.	08/13/18	RW

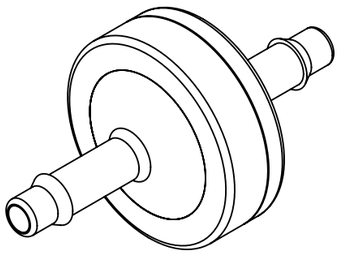

FOR REFERENCE ONLY

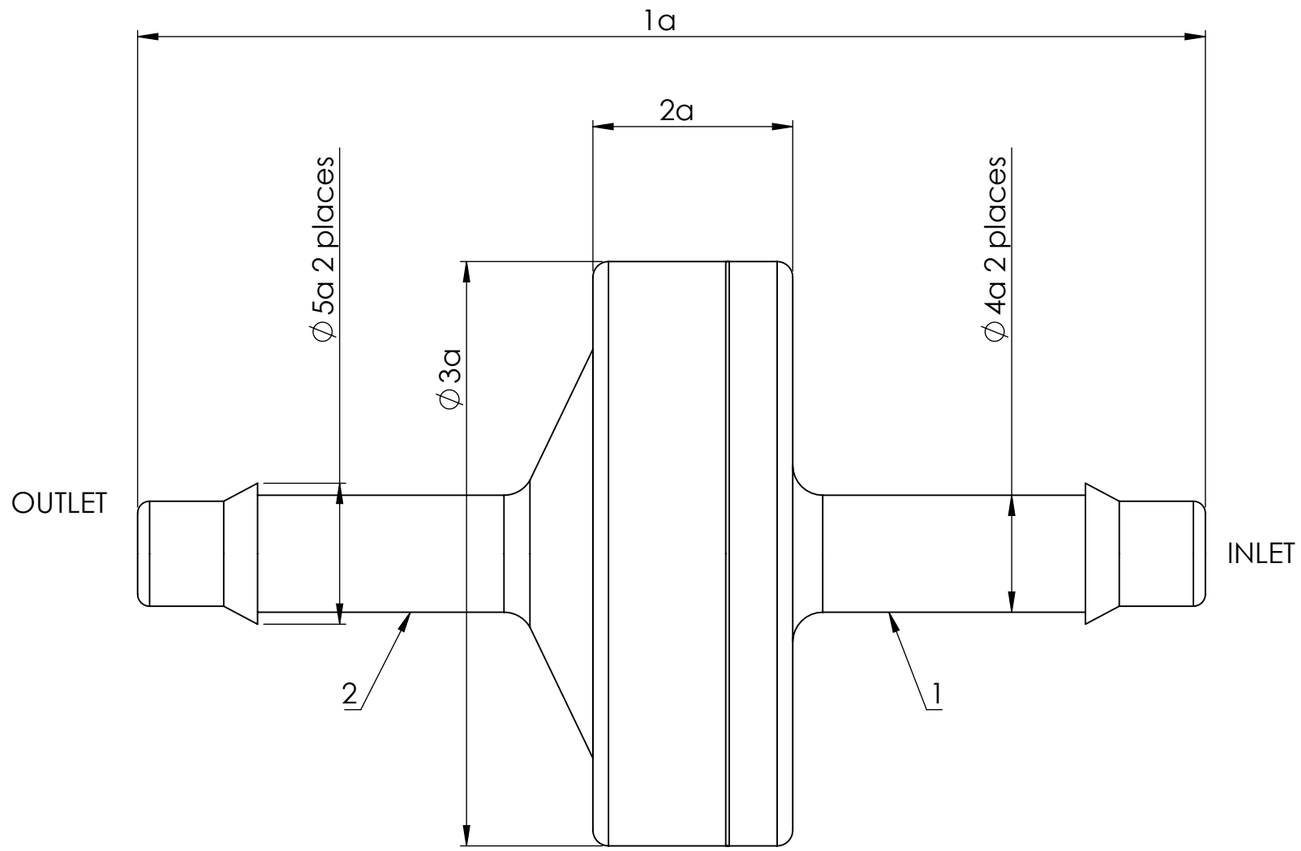

Item	Part No.	Material
1	CP046	Mac 2558 polycarbonate
2	CP047	Mac 2558 polycarbonate
3	S024	FDA silicone disc

Proprietary and confidential

All information provided in this drawing is sole property of Pneuline Supply Inc. Any reproduction in part or as a whole without the written permission From Pneuline Supply Inc. is strictly prohibited.

Pneuline Supply, Inc.

www.pneulinesupply.com Greeley, Co U.S.A.

ACETAL	KYNAR	NYLON 22HSP	NYLON R530	Polycarbonate	Polyprop glass	Polypropylene	
1a	1a	1a	1a	1a 1.400 ± .030	1a	1a	1a
2a	2a	2a	2a	2a .270 ± .015	2a	2a	2a
3a	3a	3a	3a	3a .760 ± .005	3a	3a	3a
4a	4a	4a	4a	4a .152 ± .005	4a	4a	4a
5a	5a	5a	5a	5a .181 ± .010	5a	5a	5a
6a	6a	6a	6a	6a	6a	6a	6a
7a	7a	7a	7a	7a	7a	7a	7a

DESCRIPTION

MPV-2B-PCS Assembly with silicone disc.

DRAWN BY	DATE ASSEM CREATED	APPROVED BY	APPROVAL DATE	DRAWING NAME
AW	N/A	RW	08/13/18	MPV-2B-PCS
SCALE	**SIZE**	**SHEET**		
NTS	A	1 OF 1		
				ASSEMBLY # / **REV**
				MPV-2B / A

ALL HARD COPIES OF THIS PRINT FOR REFERENCE ONLY